Harrison A-A

Precision Toolmaker's Lathe

NATIONAL DISTRIBUTOR

REM SALES INCORPORATED

34 Bradley Park Road
East Granby, Ct. 06026
(203) 653-0071

A subsidiary of THE ROBERT E. MORRIS COMPANY

Local Distributor

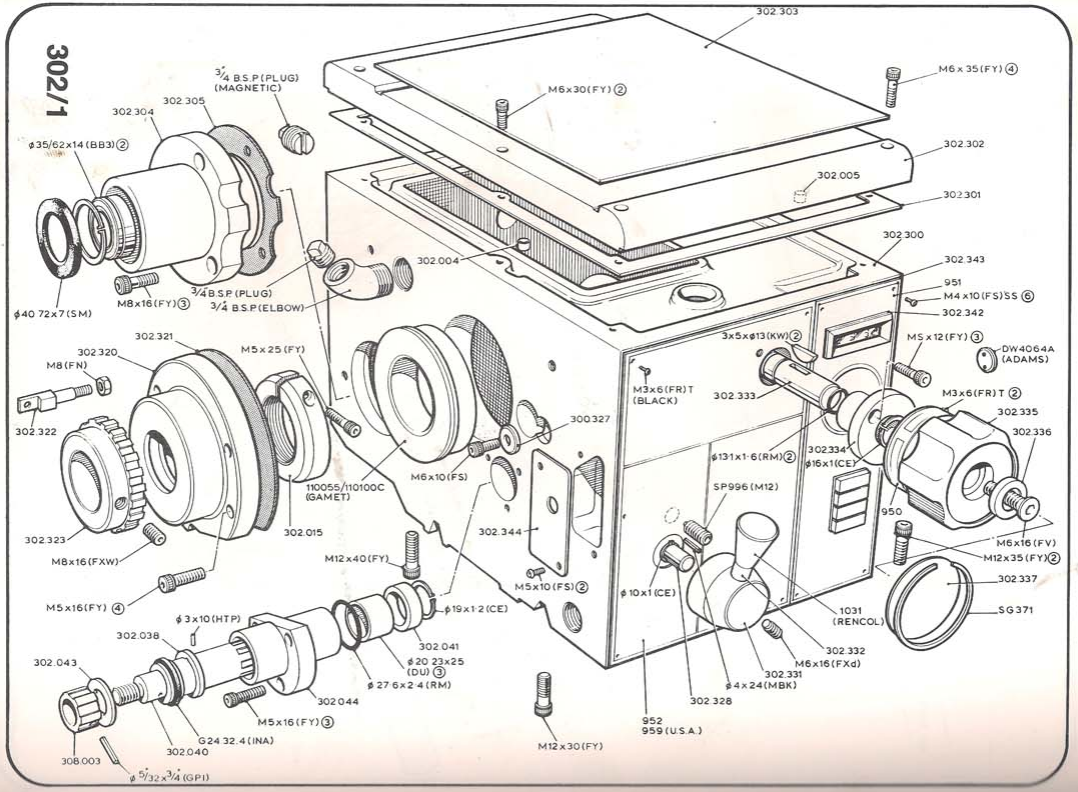
302.303
M6x35(FY)④
M6x30(FY)②
302.302
302.005
302.301
302.300
302.343
951
M4x10(FS)SS ⑥
302.342
3/4 B.S.P.(PLUG)
(MAGNETIC)
302.305
302.304
ϕ35/62x14(BB3)②
3/4 B.S.P.(PLUG)
M8x16(FY)③
3/4 B.S.P.(ELBOW)
ϕ40 72x7(SM)
302.004
302.321
M5x25(FY)
302.320
M8(FN)
302.322
302.323
M8x16(FXW)
M5x16(FY) ④
110055/110100C
(GAMET)
302.015
M6x10(FS)
300.327
M3x6(FR)T
(BLACK)
3x5xϕ13(KW)②
M5x12(FY)③
DW4064A
(ADAMS)
302.333
M3x6(FR)T ②
302.335
302.336
302.334
ϕ16x1(CE)
ϕ131x1·6(RM)②
SP996(M12)
950
302.344
M12x40(FY)
M5x10(FS)②
ϕ10x1(CE)
ϕ19x1·2(CE)
M6x16(FV)
M12x35(FY)②
302.337
SG371
1031
(RENCOL)
302.332
M6x16(FXd)
302.331
ϕ4x24(MBK)
302.328
952
959(U.S.A.)
M12x30(FY)
ϕ3x10(HTP)
302.038
302.041
ϕ20 23x25
(DU)③
ϕ27 6x2·4(RM)
302.044
302.043
M5x16(FY)③
G24 32.4(INA)
302.040
308.003
ϕ5/32x3/4(GPI)

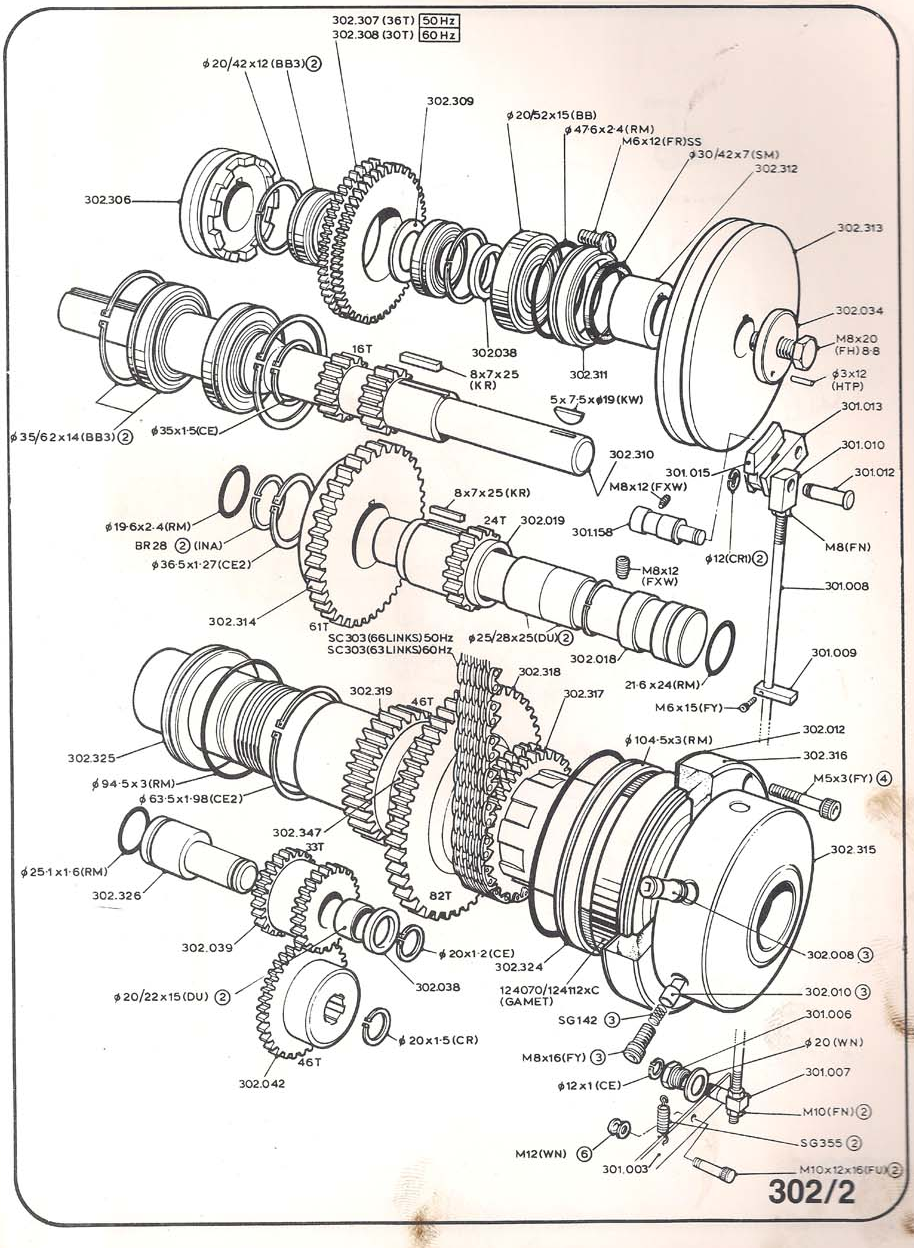
302.307 (36T) 50 Hz
302.308 (30T) 60 Hz
ϕ20/42x12 (BB3) ②
302.309
ϕ20/52x15 (BB)
ϕ47·6x2·4 (RM)
M6x12 (FR) SS
ϕ30/42x7 (SM)
302.312
302.306
302.313
302.034
M8x20 (FH) 8·8
ϕ3x12 (HTP)
16T
302.038
8x7x25 (KR)
302.311
5x7·5xϕ19 (KW)
301.013
ϕ35/62x14 (BB3) ②
ϕ35x1·5 (CE)
302.310
301.010
301.015
301.012
M8x12 (FXW)
8x7x25 (KR)
ϕ19·6x2·4 (RM)
24T
302.019
301.158
M8 (FN)
BR28 ② (INA)
ϕ36·5x1·27 (CE2)
ϕ12 (CR1) ②
M8x12 (FXW)
301.008
302.314
61T
SC303 (66 LINKS) 50Hz
SC303 (63 LINKS) 60Hz
ϕ25/28x25 (DU) ②
302.018
301.009
302.318
21·6x24 (RM)
302.319
302.317
46T
M6x15 (FY)
302.012
ϕ104·5x3 (RM)
302.325
302.316
ϕ94·5x3 (RM)
M5x3 (FY) ④
ϕ63·5x1·98 (CE2)
302.347
33T
302.315
ϕ25·1x1·6 (RM)
302.326
82T
302.039
ϕ20x1·2 (CE)
302.008 ③
302.324
ϕ20/22x15 (DU) ②
302.038
124070/124112xC (GAMET)
302.010 ③
SG142 ③
301.006
ϕ20 (WN)
ϕ20x1·5 (CR)
M8x16 (FY) ③
46T
301.007
302.042
ϕ12x1 (CE)
M10 (FN) ②
SG355 ②
M12 (WN) ⑥
301.003
M10x12x16 (FU) ②

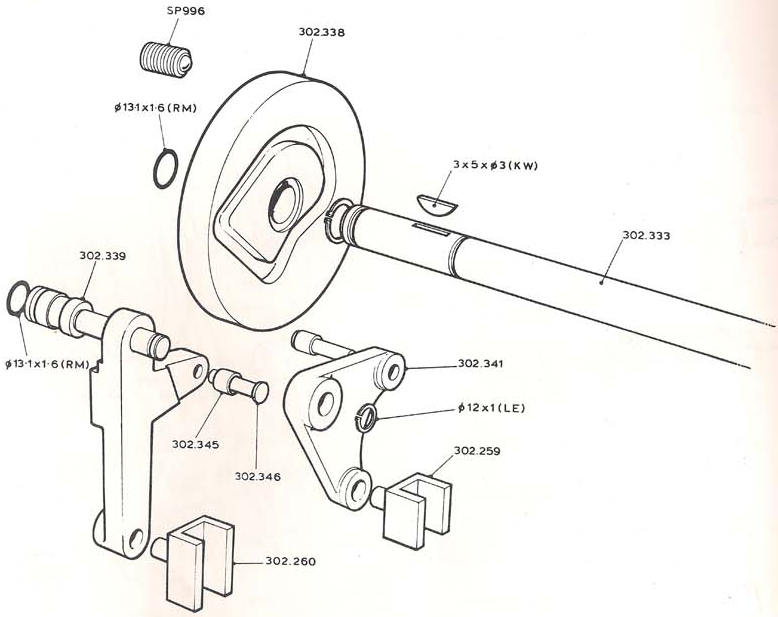
SP996
302.338
ø13·1x1·6 (RM)
3x5xø3 (KW)
302.333
302.339
ø13·1x1·6 (RM)
302.341
ø12x1 (LE)
302.345
302.346
302.259
302.260

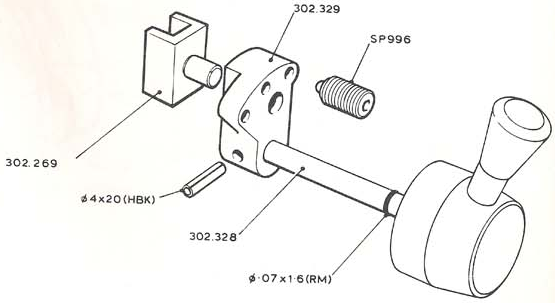
302.329
SP996
302.269
ø4x20 (HBK)
302.328
ø·07x1·6 (RM)

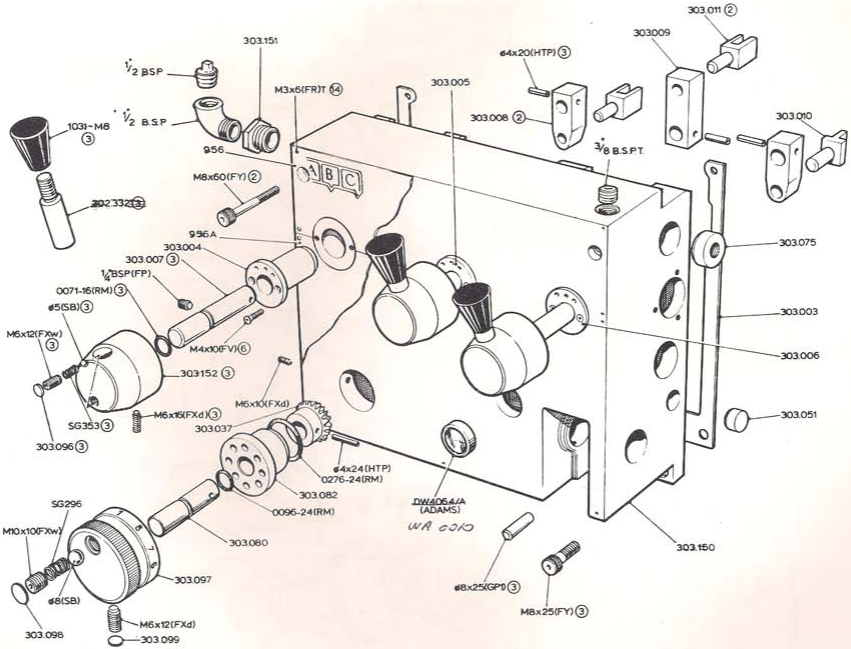
303.011 ②
303.009
303.151
ø4x20(HTP) ③
½ BSP
M3x6(FR)T ⑭
303.005
½ B.S.P
303.008 ②
303.010
1031-M8 ③
9.56
3/8 B.S.P.T.
M8x60(FY) ②
A B C
202.332(2)
9.56A
303.004
303.075
303.007 ③
¼BSP(FP)
0071-16(RM) ③
ø5(SB) ③
303.003
M6x12(FXw) ③
M4x10(FV) ⑥
303.006
303.152 ③
M6x10(FXd)
303.051
SG353 ③
M6x16(FXd) ③
303.037
303.096 ③
ø4x24(HTP)
0276-24(RM)
303.082
DW4064/A
(ADAMS)
WA 0010
SG296
0096-24(RM)
M10x10(FXw)
303.060
303.150
303.097
ø8x25(GP1) ③
ø8(SB)
M8x25(FY) ③
M6x12(FXd)
303.098
303.099

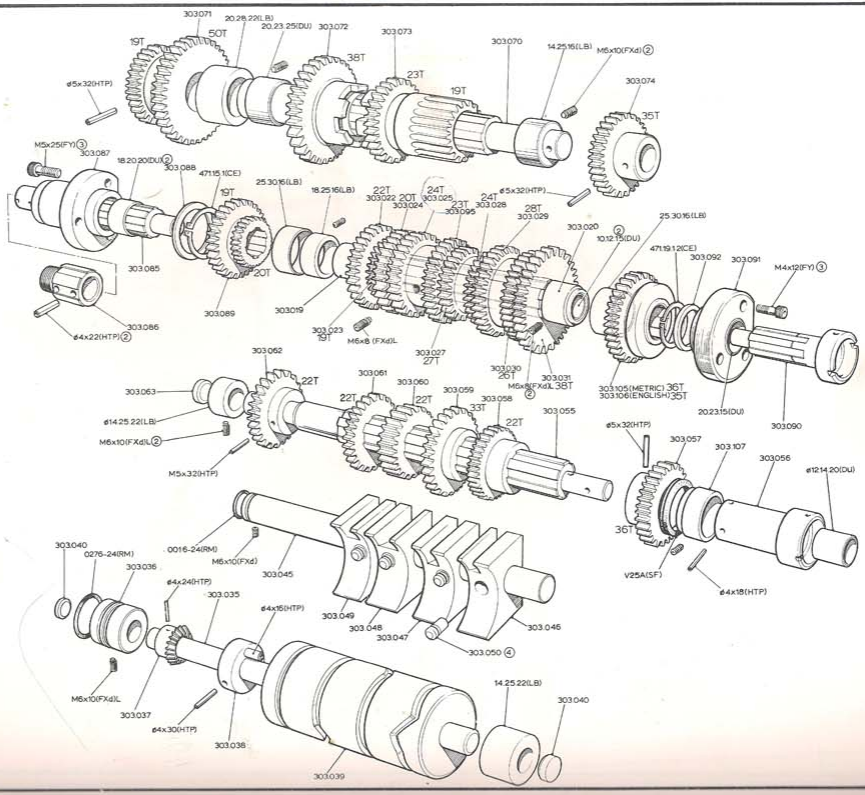
303.071
20.28.22(LB)
20.23.25(DU)
303.072
303.073
303.070
14.25.16(LB)
M6x10(FXd) ②
303.074
19T
50T
38T
23T
19T
35T
ø5x32(HTP)
M5x25(FY) ③
303.087
18.20.20(DU) ②
303.088
471.15.1(CE)
25.30.16(LB)
18.25.16(LB)
22T
303.022
20T
303.024
24T
303.025
23T
303.095
24T
303.028
28T
303.029
ø5x32(HTP)
303.020
10.12.15(DU) ②
25.30.16(LB)
471.19.1.2(CE)
303.092
303.091
M4x12(FY) ③
303.085
20T
303.089
303.019
303.086
ø4x22(HTP) ②
303.023
19T
M6x8 (FXd)L
303.027
27T
303.030
26T
303.031
M6x8(FXd)L 38T
303.105(METRIC) 36T
303.106(ENGLISH) 35T
20.23.15(DU)
303.090
303.062
22T
303.061
303.060
303.059
303.058
303.055
303.063
ø14.25.22(LB)
M6x10(FXd)L ②
M5x32(HTP)
22T
22T
33T
22T
ø5x32(HTP)
303.057
303.107
303.056
ø12.14.20(DU)
36T
V25A(SF)
ø4x18(HTP)
303.040
0276-24(RM)
303.036
0016-24(RM)
M6x10(FXd)
303.045
ø4x24(HTP)
303.035
ø4x16(HTP)
303.049
303.048
303.047
303.046
303.050 ④
M6x10(FXd)L
303.037
ø4x30(HTP)
303.038
14.25.22(LB)
303.040
303.039

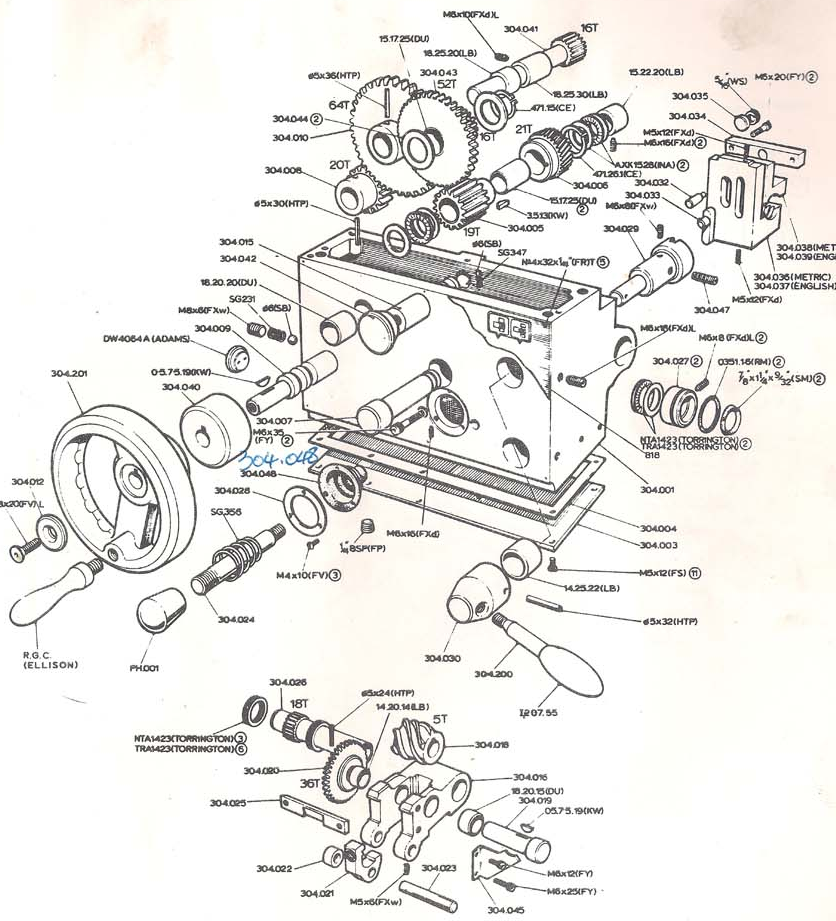

M6x10(FXd)L
304.041
16T
15.17.25(DU)
18.25.20(LB)
ø5x36(HTP)
304.043
52T
15.22.20(LB)
5/16"(WS)
M6x20(FY)②
18.25.30(LB)
304.035
64T
471.15(CE)
304.034
304.044②
304.010
16T
21T
M5x12(FXd)
M6x16(FXd)②
AXK1528(INA)②
20T
471.26.1(CE)
304.008
304.006
304.032
304.033
15.17.25(DU)②
M6x8(FXw)
ø5x30(HTP)
3.5.13(KW)
19T
304.005
304.029
304.015
ø6(SB)
SG347
304.038(METRIC)
304.039(ENGLISH)
304.042
N14x32x1/16"(FR)T⑤
304.036(METRIC)
304.037(ENGLISH)
18.20.20(DU)
SG231
M5x12(FXd)
M8x6(FXw)
ø6(SB)
304.047
304.009
M6x16(FXd)L
DW4064A (ADAMS)
M6x8 (FXd)L②
304.027②
0351.16(RM)②
304.201
0.5.7.5.19(KW)
7/8"x1 1/4"x9/32"(SM)②
304.040
304.007
M6x35 (FY)②
NTA1423(TORRINGTON)②
TRA1423(TORRINGTON)②
B18
304.048
304.012
304.001
M8x20(FV)L
304.028
SG356
304.004
M6x16(FXd)
304.003
1/16"BSP(FP)
M4x10(FV)③
M5x12(FS)⑪
14.25.22(LB)
304.024
ø5x32(HTP)
R.G.C. (ELLISON)
PH.001
304.030
304.200
I207.55
304.026
ø5x24(HTP)
18T
14.20.14(LB)
5T
NTA1423(TORRINGTON)③
TRA1423(TORRINGTON)⑥
304.018
304.020
304.016
36T
18.20.15(DU)
304.019
304.025
0.5.7.5.19(KW)
304.022
304.023
M6x12(FY)
304.021
M5x6(FXw)
M6x25(FY)
304.045

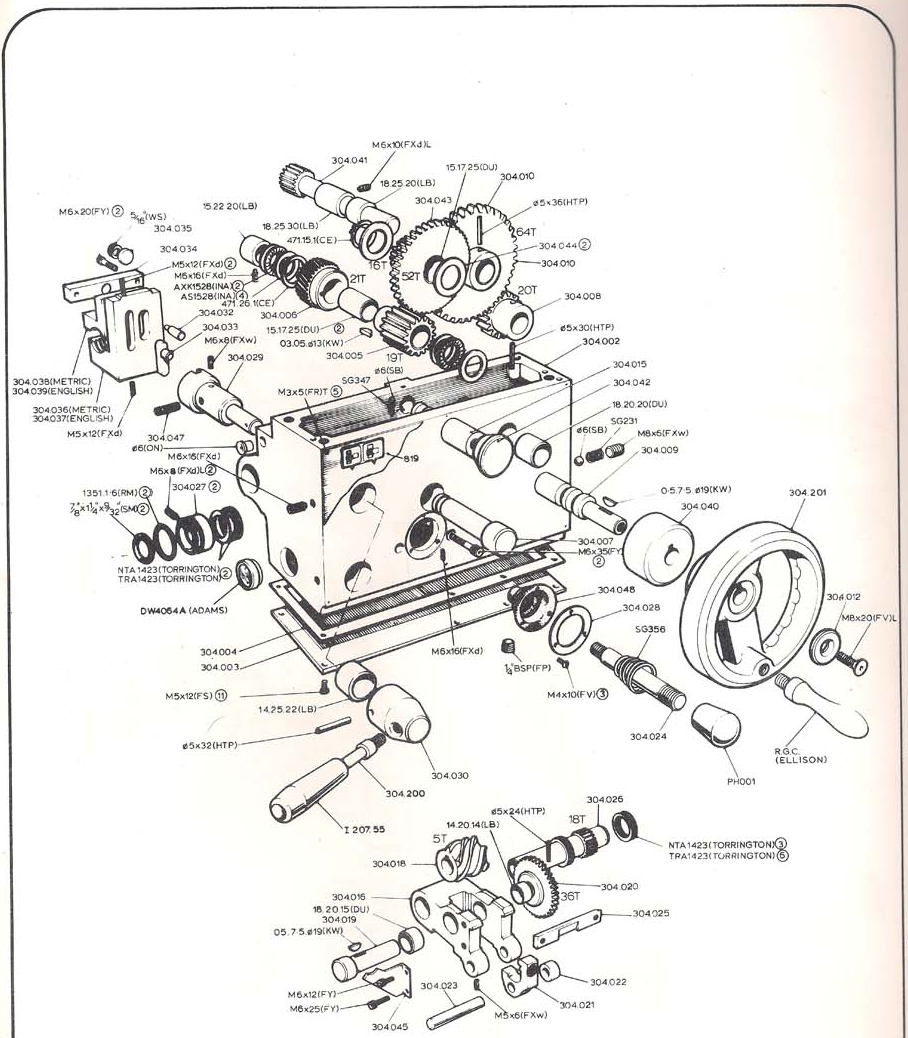
M6x10(FXd)L
304.041
18.25.20(LB)
15.17.25(DU)
304.010
304.043
ø5x36(HTP)
M6x20(FY) ②
5/16(WS)
15.22.20(LB)
304.035
18.25.30(LB)
471.15.1(CE)
64T
304.044 ②
304.034
M5x12(FXd) ②
M6x16(FXd)
AXK1528(INA) ②
AS1528(INA) (4)
471.26.1(CE)
16T
52T
304.010
21T
20T
304.008
304.032
304.006
304.033
15.17.25(DU) ②
03.05.ø13(KW)
ø5x30(HTP)
M6x8(FXw)
304.005
19T
304.002
304.029
ø6(SB)
304.015
304.038(METRIC)
304.039(ENGLISH)
SG347
304.042
M3x5(FR)T ⑤
18.20.20(DU)
304.036(METRIC)
304.037(ENGLISH)
SG231
M5x12(FXd)
ø6(SB)
M8x5(FXw)
304.047
ø6(ON)
M6x16(FXd)
819
304.009
M6x8(FXd)L ②
1351.1.6(RM) ②
304.027 ②
0.5.7.5.ø19(KW)
304.201
7/8"x1 1/4"x9/32"(SM) ②
304.040
304.007
M6x35(FY) ②
NTA1423(TORRINGTON)
TRA1423(TORRINGTON) ②
304.048
DW4064A (ADAMS)
304.028
304.012
M8x20(FV)L
SG356
304.004
M6x16(FXd)
304.003
1/4 BSP(FP)
M5x12(FS) ⑪
M4x10(FV) ③
14.25.22(LB)
304.024
ø5x32(HTP)
R.G.C.
(ELLISON)
304.030
PH001
304.200
I.207.55
304.026
ø5x24(HTP)
18T
14.20.14(LB)
5T
NTA1423(TORRINGTON) ③
TRA1423(TORRINGTON) ⑤
304.018
304.020
36T
304.016
18.20.15(DU)
304.019
304.025
05.7.5.ø19(KW)
304.022
M6x12(FY)
304.023
M6x25(FY)
304.021
M5x6(FXw)
304.045

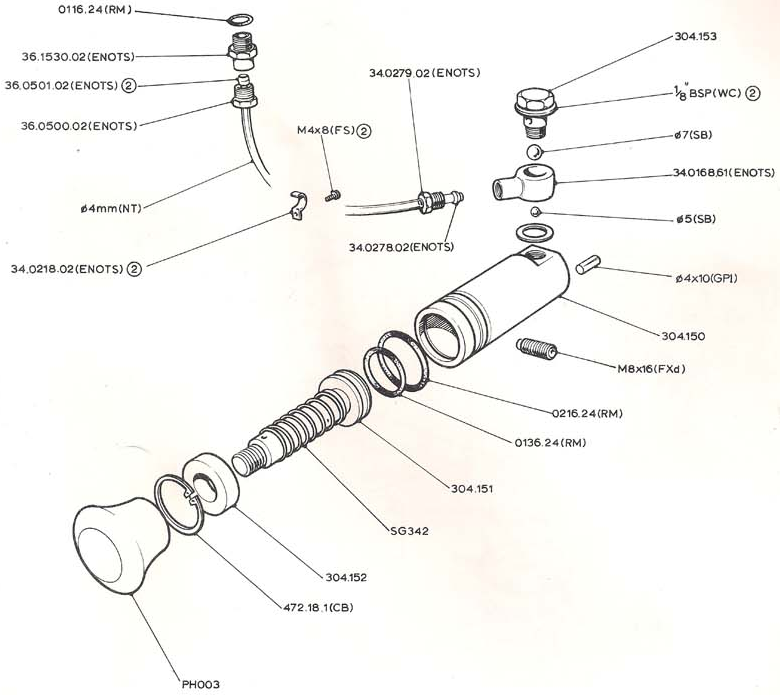
0116.24(RM)
36.1530.02(ENOTS)
36.0501.02(ENOTS) 2
36.0500.02(ENOTS)
ø4mm(NT)
34.0218.02(ENOTS) 2
M4x8(FS) 2
34.0279.02(ENOTS)
34.0278.02(ENOTS)
304.153
1/8" BSP(WC) 2
ø7(SB)
34.0168.61(ENOTS)
ø5(SB)
ø4x10(GPI)
304.150
M8x16(FXd)
0216.24(RM)
0136.24(RM)
304.151
SG342
304.152
472.18.1(CB)
PH003

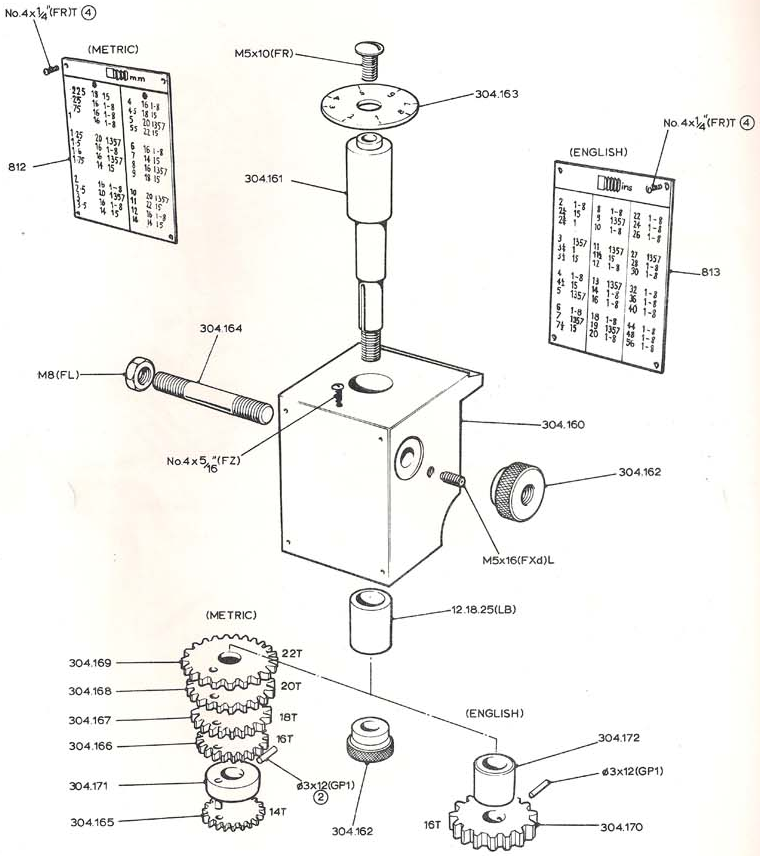
No.4x1¼"(FR)T ④
(METRIC)
812
M5x10(FR)
304.163
304.161
No.4x1¼"(FR)T ④
(ENGLISH)
B13
304.164
M8(FL)
304.160
No.4x5/16"(FZ)
304.162
M5x16(FXd)L
12.18.25(LB)
(METRIC)
304.169
304.168
304.167
304.166
304.171
304.165
22T
20T
18T
16T
14T
ø3x12(GP1) ②
304.162
(ENGLISH)
304.172
ø3x12(GP1)
16T
304.170

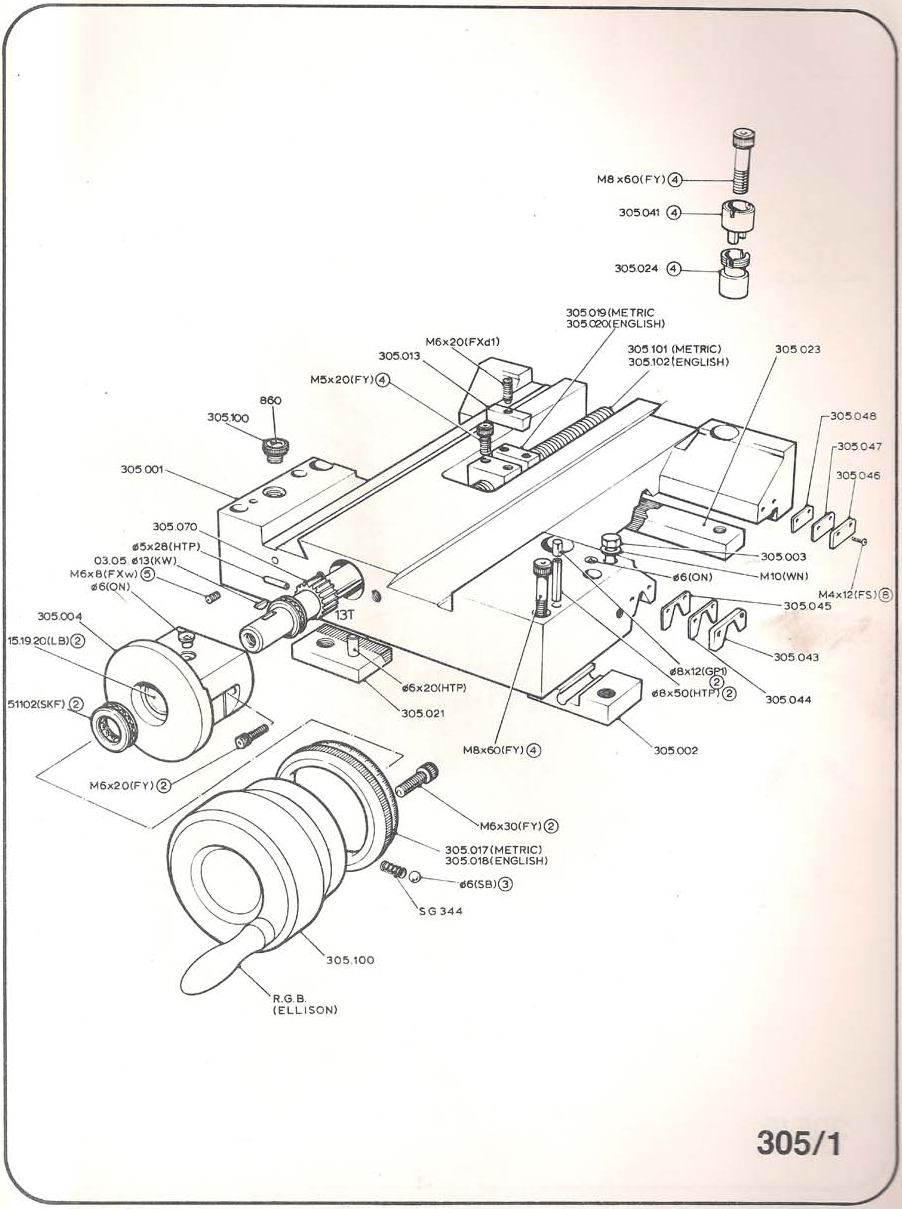
M8 x60(FY) 4
305.041 4
305.024 4
305.019(METRIC
305.020(ENGLISH)
M6x20(FXd1)
305.013
305.101 (METRIC)
305.102(ENGLISH)
305.023
M5x20(FY) 4
860
305.100
305.048
305.047
305.046
305.001
305.070
ø5x28(HTP)
03.05. ø13(KW)
M6x8(FXw) 5
ø6(ON)
305.003
ø6(ON)
M10(WN)
M4x12(FS) 8
305.045
305.004
13T
15.19.20(LB) 2
305.043
ø8x12(GF1)
2
ø6x20(HTP)
ø8x50(HTP) 2
305.044
51102(SKF) 2
305.021
M8x60(FY) 4
305.002
M6x20(FY) 2
M6x30(FY) 2
305.017(METRIC)
305.018(ENGLISH)
ø6(SB) 3
SG 344
305.100
R.G.B.
(ELLISON)

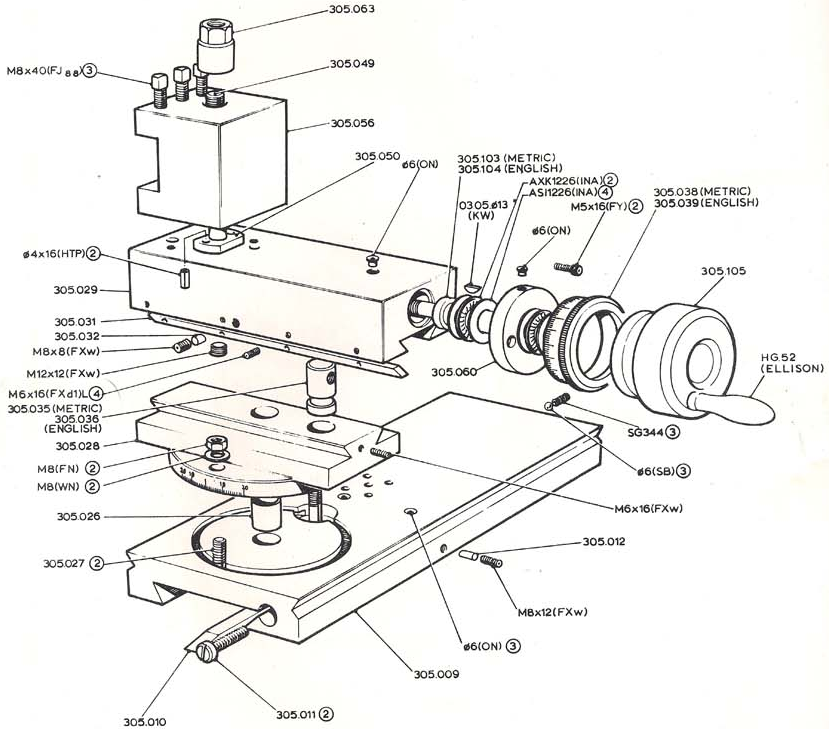
305.063
M8x40(FJ 8 8X)③
305.049
305.056
305.050
ø6(ON)
305.103 (METRIC)
305.104 (ENGLISH)
AXK1226(INA)②
ASI1226(INA)④
03.05.ø13
(KW)
M5x16(FY)②
305.038 (METRIC)
305.039 (ENGLISH)
ø6(ON)
ø4x16(HTP)②
305.029
305.105
305.031
305.032
M8x8(FXw)
M12x12(FXw)
305.060
HG.52
(ELLISON)
M6x16(FXd1)L④
305.035 (METRIC)
305.036
(ENGLISH)
SG344③
305.028
M8(FN) ②
M8(WN) ②
ø6(SB)③
M6x16(FXw)
305.026
305.012
305.027 ②
M8x12(FXw)
ø6(ON) ③
305.009
305.010
305.011 ②

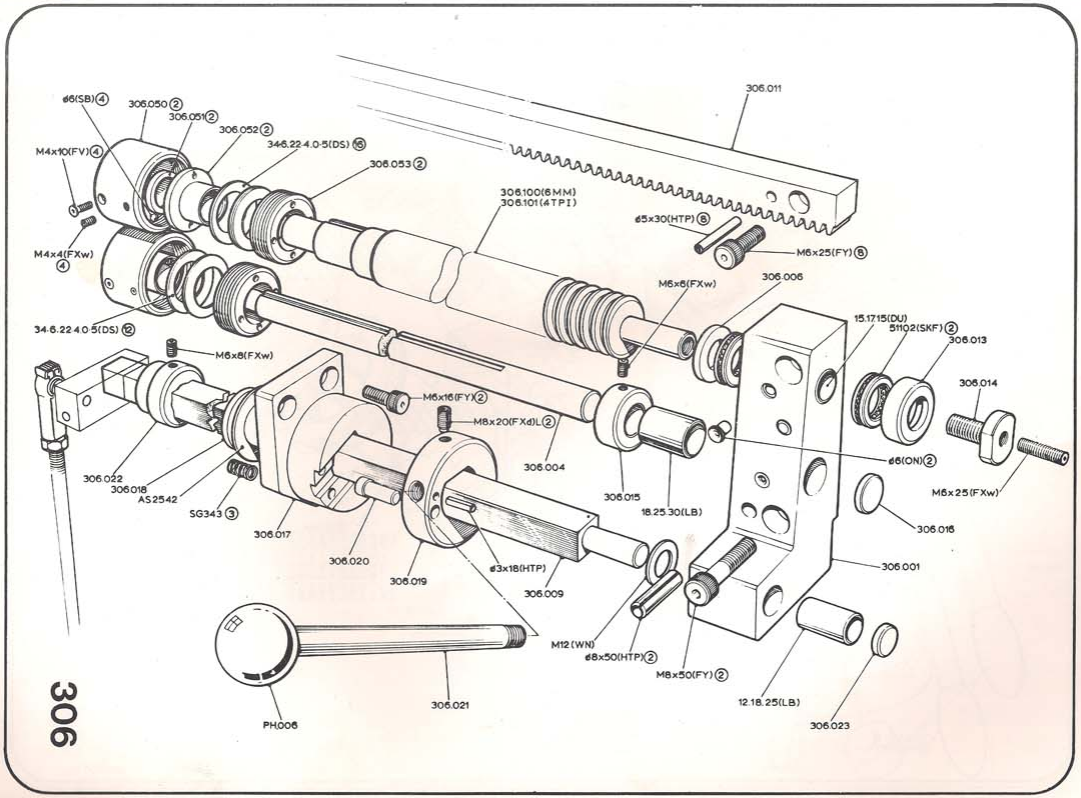
306.011
ø6(SB)④
306.050②
306.051②
306.052②
346.22.4.0.5(DS)⑯
M4x10(FV)④
306.053②
306.100(6MM)
306.101(4TPI)
ø5x30(HTP)⑧
M6x25(FY)⑧
M4x4(FXw)
④
M6x8(FXw)
306.006
34.6.22.4.0.5(DS)②
15.17.15(DU)
51102(SKF)②
306.013
M6x8(FXw)
306.014
M6x16(FY)②
M8x20(FXd)L②
306.004
ø6(ON)②
306.022
306.018
AS2542
306.015
M6x25(FXw)
SG343③
18.25.30(LB)
306.016
306.017
306.020
ø3x18(HTP)
306.001
306.019
306.009
M12(WN)
ø8x50(HTP)②
M8x50(FY)②
306.021
12.18.25(LB)
PH.006
306.023

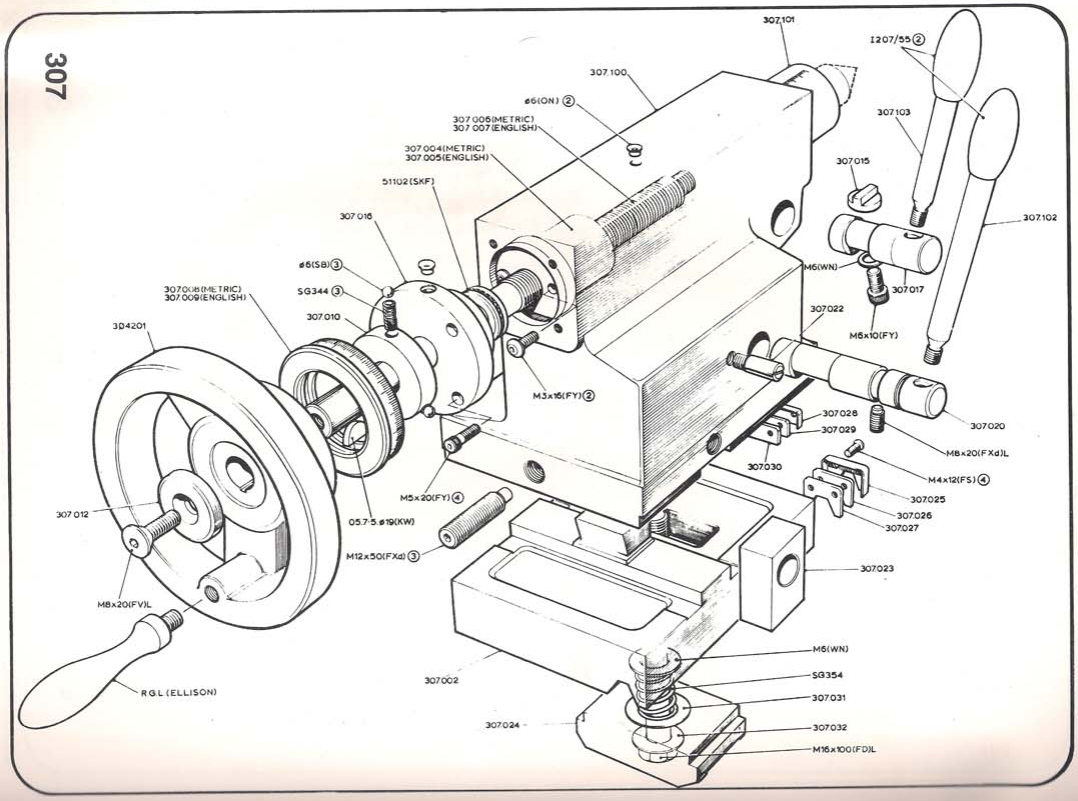
307.101
1207/55 ②
307.100
ø6(ON) ②
307.103
307.006(METRIC)
307.007(ENGLISH)
307.004(METRIC)
307.005(ENGLISH)
307.015
51102(SKF)
307.102
307.016
M6(WN)
ø6(SB) ③
SG344 ③
307.017
307.008(METRIC)
307.009(ENGLISH)
307.010
307.022
304201
M6x10(FY)
M3x16(FY) ②
307.028
307.020
307.029
M8x20(FXd)L
307.030
M4x12(FS) ④
M5x20(FY) ④
307.025
307.012
05.7-5.ø19(KW)
307.026
307.027
M12x50(FXd) ③
307.023
M8x20(FV)L
M6(WN)
SG354
307.002
R.G.L (ELLISON)
307.031
307.024
307.032
M16x100(FD)L

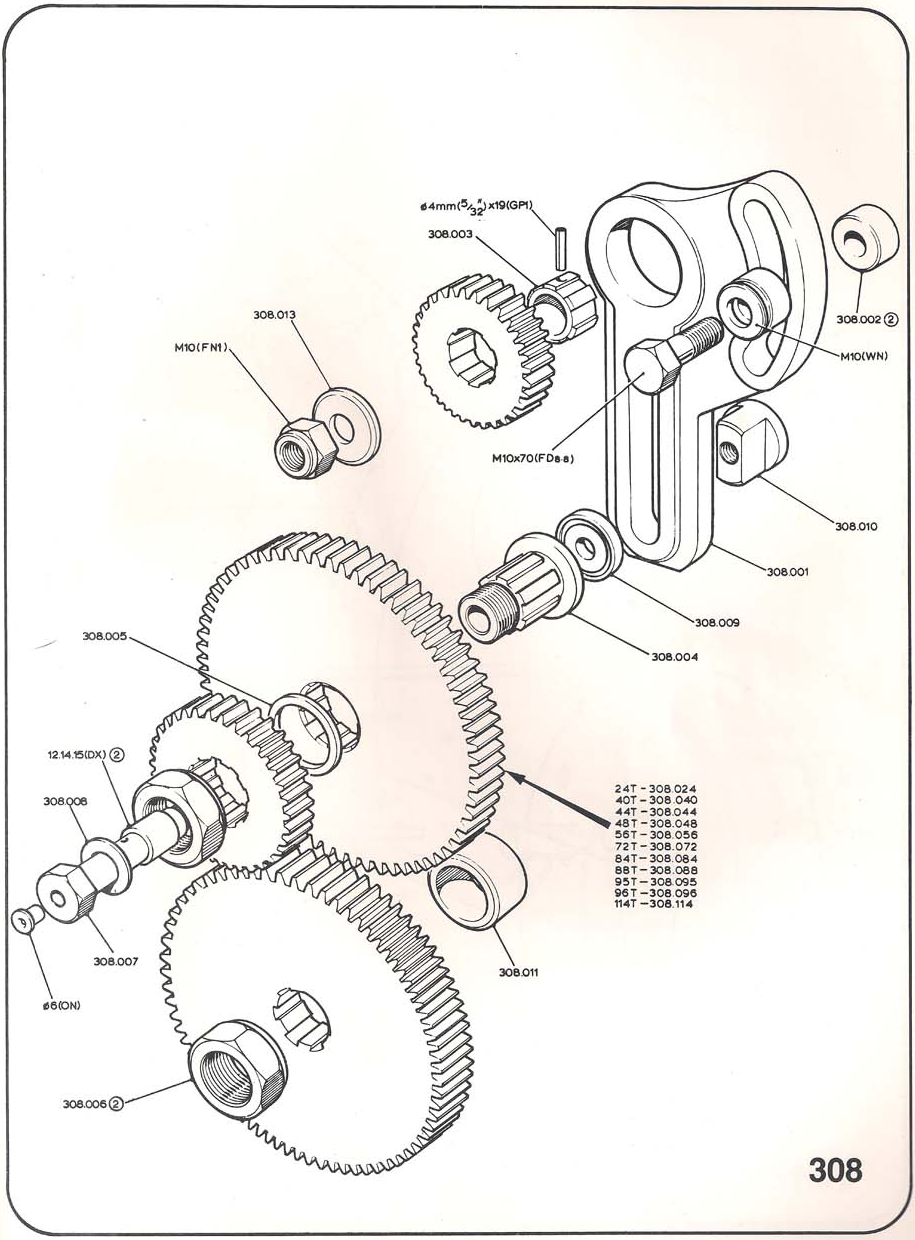
ø4mm(5/32")x19(GP1)
308.003
308.013
M10(FN1)
308.002 ②
M10(WN)
M10x70(FDs.s)
308.010
308.001
308.009
308.004
308.005
12.14.15(DX) ②
308.008
24T - 308.024
40T - 308.040
44T - 308.044
48T - 308.048
56T - 308.056
72T - 308.072
84T - 308.084
88T - 308.088
95T - 308.095
96T - 308.096
114T - 308.114
308.007
308.011
ø6(ON)
308.006 ②

311.51 ENGLISH

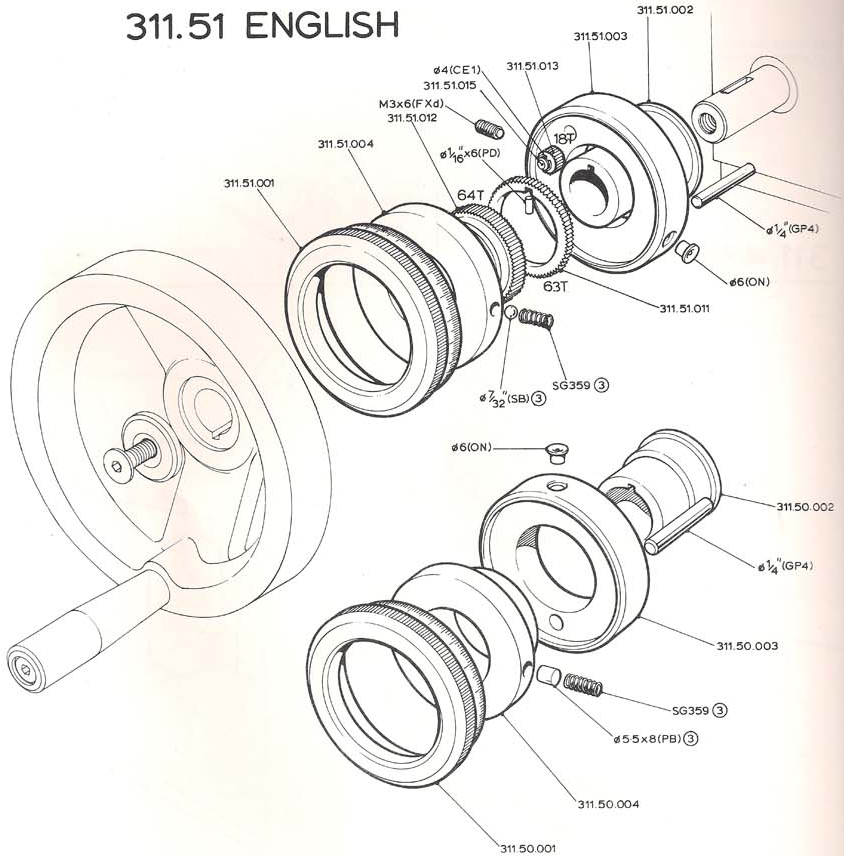

311.50 METRIC